Eskom	Standard	Technology

Title: **OUTDOOR, POLE-MOUNTED, DISTRIBUTION SINGLE-PHASE, OFF-LOAD DISCONNECTORS FOR MV LINE APPLICATION WITH REMOVABLE LINK FOR NOMINAL A.C. VOLTAGES OF 22 KV.**

Unique Identifier:	**240-68973356**
Alternative Reference Number:	**34-349**
Area of Applicability:	**Engineering**
Documentation Type:	**Standard**
Revision:	**3**
Total Pages:	**28**
Next Review Date:	**September 2024**
Disclosure Classification:	**Controlled Disclosure**

Compiled by	Approved by	Authorized by
Sakkie van Aarde	Riaz Asmal	Bheki Ntshangase
Senior Adviser	MV/LV SC Chairperson	Senior Manager – PDE HV Plant
Date: 06 February 2018	Date: 9 February 2018	Date: 9/2/2018

Supported by SCOT/SC

Riaz Asmal

MV/LV SC Chairperson

Date: 9 February 2018

PCM Reference: **N/A**

SCOT Study Committee Number/Name: **MV/LV**

Content

Page

1. Introduction 4
2. Supporting clauses 4
   - 2.1 Scope 4
     - 2.1.1 Purpose 4
     - 2.1.2 Applicability 4
   - 2.2 Normative/informative references 4
     - 2.2.1 Normative 4
     - 2.2.2 Informative 5
   - 2.3 Definitions 5
     - 2.3.1 General 5
     - 2.3.2 Disclosure classification 5
   - 2.4 Abbreviations 5
   - 2.5 Roles and responsibilities 5
   - 2.6 Process for monitoring 5
   - 2.7 Related/supporting documents 5
3. Requirements 6
   - 3.1 General 6
     - 3.1.1 System conditions 6
     - 3.1.2 Installation conditions 6
   - 3.2 Ratings 6
     - 3.2.1 Rated current-carrying capability 6
     - 3.2.2 Rated insulation level 6
   - 3.3 Insulators 7
     - 3.3.1 Profile parameters 7
     - 3.3.2 INSULATOR FIXING 7
     - 3.3.3 Specific creepage distance 7
   - 3.4 Electrical components 7
     - 3.4.1 Current path 7
     - 3.4.2 Contacts 7
     - 3.4.3 Operation 8
     - 3.4.4 Indication of position 8
     - 3.4.5 Interchangeability of removable double blade 630°Amp link 8
     - 3.4.6 Securing of position 8
     - 3.4.7 Material 9
     - 3.4.8 Mechanical strength 9
     - 3.4.9 Conductor terminals 9
     - 3.4.10 Mounting 10
     - 3.4.11 Earthing pin 10
     - 3.4.12 Drawings 10
4. Marking and packaging 10
   - 4.1 Marking 10
   - 4.2 Packaging 10
5. Tests 11
   - 5.1 Type tests 11

ESKOM COPYRIGHT PROTECTED

When downloaded from the WEB, this document is uncontrolled and the responsibility rests with the user to ensure it is in line with the authorized version on the WEB.

5.2 Routine tests 11

6. Authorization 12

7. Revisions 12

8. Development team 14

9. Acknowledgements 15

Annex A – Double blade 630 amp link. 16

Annex B – Impact assessment 20

Annex C – : - Test report summary sheet 23

Annex D – Technical schedules A and B 24

Figures

Figure A.1: Removable double blade 630 amp link assembly with fixing stem at 20° (±0.2mm) 16

Figure A.2: Removable double blade 630 amp link and lower hinge details (±0.2mm) 16

Figure A.3: Double blade 630 amp link base lower hinge details (±0.2mm) 17

Figure A.4: Insulator fixing stem 17

Figure A.5: Typical L-bracket for wooden cross-arm 18

Figure A.6: Typical L-bracket for steel cross-arm 19

Tables

Table 1: Rated values for single-phase removable double blade 630°amp disconnectors 6

Table 2: Rated insulation levels 6

Table 3: Specific creepage distance for inland and coastal applications 7

Table 4: Standard bolt tightening toque 9

Table 5: Rated mechanical terminal loads 9

ESKOM COPYRIGHT PROTECTED

When downloaded from the WEB, this document is uncontrolled and the responsibility rests with the user to ensure it is in line with the authorized version on the WEB.

1. Introduction

This specification was prepared to establish and promote uniform requirements for distribution single phase, off-load disconnectors for MV line application with removable double blade 630°amp link assembly with nominal voltages of 22 kV in the Eskom business

2. Supporting clauses

2.1 Scope

This specification covers Eskom's requirements for outdoor, pole-mounted, distribution single phase, off-load disconnectors for MV line application with removable double blade 630°amp link assemblies for application on systems with nominal voltages of 22 kV.

Attention is drawn to the fact that it is claimed that compliance with this document may involve the use of patents. Eskom takes no position concerning the evidence, validity and scope of these patent rights. Eskom shall not be held responsible for identifying any or all such patent rights.

2.1.1 Purpose

This standard covers Distribution Group requirements for outdoor, pole-mounted, distribution single phase, off-load disconnectors for MV line application with removable double blade 630°amp link assemblies for application on systems with nominal voltages of 22 kV.

This document shall apply throughout Eskom Holdings Limited Divisions.

2.1.2 Applicability

This document shall apply throughout Eskom Holdings Limited Divisions.

2.2 Normative/informative references

Parties using this document shall apply the most recent edition of the documents listed in the following paragraphs.

2.2.1 Normative

[1] ISO 9001, Quality Management Systems.

[2] IEC/SANS 62271-102, High-voltage switchgear and controlgear Part 102: Alternating current disconnectors and earthing switches.

[3] IEC/SANS 62271-1, Common specifications for high-voltage switchgear and controlgear standards.

[4] IEC/SANS 60815, Selection and dimensioning of high-voltage insulators intended for use in polluted conditions.

[5] IEC/SANS 61230, Live working – Portable equipment for earthing or earthing and short-circuiting.

[6] BS-EN-ISO 4521, Method for specifying electroplated coatings of silver and silver alloys for engineering purposes.

[7] SANS 121, Hot-dip galvanized coating on fabricated iron and steel articles – Specifications and test methods.

[8] SANS 1700, Fasteners.

[9] 240-75661213 (DPC 34-216): KIPTS natural ageing and pollution performance test procedure for outdoor insulator products. Section 4 – Particular requirements for switch-disconnectors.

[10] 240-130403197 (DSP 34-352), Specification for 22 kV and 33 kV, outdoor single phase, offload, Disconnectors for Substation application.

ESKOM COPYRIGHT PROTECTED

When downloaded from the WEB, this document is uncontrolled and the responsibility rests with the user to ensure it is in line with the authorized version on the WEB.

2.2.2 Informative

[11] 32-644, Eskom documentation management standard.

[12] 474-65, Operating manual of the Steering Committee of Technologies (SCOT).

[13] 240-100495413 (DPC 34-224): KIPTS natural ageing and pollution performance test procedure for outdoor insulator products. Section 0 –General requirements.

2.3 Definitions

2.3.1 General

Definition	Description
	The definitions in IEC/SANS 62271-1 shall apply to this specification.

2.3.2 Disclosure classification

Controlled disclosure: controlled disclosure to external parties (either enforced by law, or discretionary).

2.4 Abbreviations

Abbreviation	Description
BIL	Basic Insulation Level
CAP	Committee for Accepted Products
KIPTS	Koeberg Insulator Performance Testing Station
LAP	List of Accepted Products
MV	Medium Voltage
n/a	not applicable
SPD	Single-phase Disconnector

2.5 Roles and responsibilities

Not applicable

2.6 Process for monitoring

Not applicable

2.7 Related/supporting documents

Not applicable

ESKOM COPYRIGHT PROTECTED

When downloaded from the WEB, this document is uncontrolled and the responsibility rests with the user to ensure it is in line with the authorized version on the WEB.

3. Requirements

3.1 General

3.1.1 System conditions

a) Voltage level: 24 kV

b) Number of phases: three, two or single

c) System frequency: 50 Hz

d) Earthing: effective and non-effective

3.1.2 Installation conditions

a) Altitude: up to 1 800 m

b) Ambient air temperature: -15 °C to 50 °C

c) Relative humility: up to 100%

d) Solar radiation: 1 100 W/m^2

e) Pollution levels: very heavy

3.2 Ratings

3.2.1 Rated current-carrying capability

The rated current-carrying capability of SPD's shall be as specified in Table 1.

Table 1: Rated values for single-phase removable double blade 630°amp disconnectors

Rated voltage (kV rms)	Rated 3 s short-time withstand current (kA rms)	Rated peak withstand current (kA peak)	Rated normal current (A rms)
24	12.5	30	630

3.2.2 Rated insulation level

The rated insulation level shall be the appropriate combination of the rated lightning impulse peak withstand voltage and the rated short-duration power-frequency withstand voltage as given in Table 2.

This shall be applicable to both the open and closed positions.

Table 2: Rated insulation levels

Nominal system voltage (U_n) (kV rms)	Highest system voltage (U_m) (kV rms)	Power frequency 60 s wet withstand voltage (kV rms)	Lightning impulse withstand (kV peak)	
			Live terminals[a] (upper and lower) to earthed fixing stem	Across isolating distance
22	24	50	150	172.5
[a] Conducted in the open and closed positions.				

In order to ensure that flashovers will occur across the insulator to ground rather than across the isolating distance, the impulse withstand value across the isolating distance shall be at least 15% higher than the impulse withstand value between the live terminals and the earthed fixing stem.

ESKOM COPYRIGHT PROTECTED

When downloaded from the WEB, this document is uncontrolled and the responsibility rests with the user to ensure it is in line with the authorized version on the WEB.

3.3 Insulators

3.3.1 Profile parameters

Insulator profile parameters shall comply with the relevant part of [4] IEC/SANS 60815.

3.3.2 INSULATOR FIXING

Insulator fixing shall be with double bolt arrangements on either side of every insulator OR a double delft pin with a single bolt arrangement on either side.

3.3.3 Specific creepage distance

The SPD shall be suitable for application in areas with light to medium and heavy to very heavy pollution levels as defined by [4] IEC/SANS 60815.

The minimum creepage requirements between phase and earth shall be as given in Table 3.

Table 3: Specific creepage distance for inland and coastal applications

Parameter	Coastal application
SANS 60815 pollution level	Very heavy (VH)
Nominal Voltage	22 kV
Creepage distance (Insulation material)	744 mm
Creepage[a] (Insulation material)	31 mm/kV (silicon rubber or polymer)
[a] Creepage = Creepage distance [mm]/U_m [kV]	

3.4 Electrical components

3.4.1 Current path

a) Components in the load current path shall be manufactured of high conductivity, corrosion-resistant materials such as copper and its alloys (e.g. brass, phosphor or bronze aluminium). Load current shall not be permitted to flow through ferrous components, springs or spring-loaded mechanisms.

b) The current paths shall have a minimal number of joints and current transfer points. Points at which current transfer takes place shall be silver-plated in accordance with [3] BS-EN-ISO 4521, using the coating classification Cu/Ag (95,0) 25 (i.e. a coating with a silver content of at least 95% by mass and a thickness of at least 25 µm on brass or copper).

c) If alternative coatings or materials are used, the onus is on the supplier to prove that the coating or material provides equivalent or better current transfer characteristics.

d) All load current paths shall be capable of carrying the specified rated current without exceeding the permitted temperature rise limits as per [3] IEC/SANS 62271-1.

3.4.2 Contacts

a) Positive contact pressure shall be maintained at all times by means of a spring manufactured from corrosion-resistant material such as phosphor bronze, beryllium copper or stainless steel of grades 304 or 316. If a different method is utilized the detail shall be submitted with the enquiry documentation.

b) The contacts shall be silver-plated in accordance with [3] BS-EN-ISO 4521, using the coating classification Cu/Ag (95,0) 25 (i.e. a coating with a silver content of at least 95% by mass and a thickness of at least 25 µm on brass or copper).

ESKOM COPYRIGHT PROTECTED

When downloaded from the WEB, this document is uncontrolled and the responsibility rests with the user to ensure it is in line with the authorized version on the WEB.

c) The contacts shall be self-aligning.

d) A positive wiping action shall take place between the fixed and movable parts of the contacts.

e) The contacts shall not be subject to accumulation of dirt, moisture or pitting.

3.4.3 Operation

The SPD shall be operated by using a portable fibre-glass operating rod (link-stick) from ground level.

The operating mechanism of the SPD with a removable switchblade shall work as follows:

a) To open the SPD from a closed position, the switchblade shall be able to be pulled into the open position.

b) Once opened, the switchblade shall be able to be removed.

c) To close the SPD from an open position, the SPD switchblade shall be able to be pushed into the closed position.

3.4.4 Indication of position

To determine whether the SPD with removable switchblade is in the open or closed position, the gap or isolating distance of the installed SPD should be located in a position clearly visible from ground level.

3.4.5 Interchangeability of removable double blade 630°Amp link

The double blade 630 Amp link shall be interchangeable between different double blade link designs.

The upper contact on the double blade link base shall be designed to accommodate a double blade in accordance with Figure A.2

Interface between lower contact, hinge and trunnion:

The lower contact and hinge, of the double blade 630 amp link bases shall be designed in accordance with Figure A.1 to accommodate a double blade 630 amp link with cam and trunnion details in accordance with Figure A.3.

Interchangeability between double blade 630 amp link bases:

The distance between the upper and lower contacts of the double blade 630 amp link bases shall be such that a removable double blade 630 amp link with a 570 mm length, see Figure A.1 and Figure A.2 can be accommodated.

Interface between fixing stem and mounting bracket:

Double blade 630 amp link bases shall have an insulator-fixing stem with a 14 mm diameter fixing hole, in accordance with Figure A.4. The fixing stem shall allow for attachment to a bracket in accordance with Figure A.5, and Figure A.6.

3.4.6 Securing of position

The SPD shall be designed in such a way that it cannot come out of the closed positions due to:

a) gravity;

b) wind pressure;

c) vibrations;

d) reasonable shocks; or

e) accidental touching of the operating mechanism.

ESKOM COPYRIGHT PROTECTED

When downloaded from the WEB, this document is uncontrolled and the responsibility rests with the user to ensure it is in line with the authorized version on the WEB.

3.4.7 Material

a) The materials used in the design and manufacture of the SPDs shall comply with the following requirements:

b) Ferrous and ferrous alloy parts shall be hot-dip galvanized in accordance with [7] SANS 121. This requirement also applies to assembly bolts, nuts and washers.

c) Adverse effects, such as galvanic corrosion of contact between dissimilar metals, shall be minimized.

d) Bolts, nuts and washers of size M8 or smaller and all springs shall be manufactured from stainless steel of grades 304 or 316.

e) All bolts and nuts shall be torque sealed after it's been torqued to the correct value as per standard bolt tightening toque Table 4.

Table 4: Standard bolt tightening toque

BOLT THREAD	SPANNER WIDTH	BOLT TIGHTENING TORQUE (N-m)				
		STEEL (HDG)		S/STEEL	BRONZE	ALUM
		5.6	8.8	A2	F60	7075 (P.60)
M 8	13	-	15 – 20	20	15	10
M10	17	13	26 – 35	35	26	21
M12	19	23	45 – 60	60	45	36
M14	22	35	60	80	70	55
M16	24	56	75	110	-	70

The design of bushes shall prevent the ingress and accumulation of dust.

3.4.8 Mechanical strength

a) The SPD shall be capable of withstanding the total forces, including wind loading and electromagnetic forces, related to its application and rating, without reducing its reliability or current-carrying capacity.

b) All the subcomponents of the operating mechanism shall be strong enough to prevent misalignment of the contacts under normal operation (open and close) of the SPD.

c) The rated mechanical terminal loads of the SPD shall be in accordance with Table 4.

Table 5: Rated mechanical terminal loads

Straight load (N)	Cross-load (N)
400	130
Example: 'Straight load' and 'Cross-load' are as defined in 4.103 of [2] IEC/SANS 62271-102.	

3.4.9 Conductor terminals

a) In order to permit the use of compression-type lug fittings, a flat area of at least 30 mm x 30 mm shall be provided, suitable for Kingbird conductor.

b) An M12 x 50 mm setscrew or threaded stud shall be located in the centre of the flat area, complete with two flat washers, lock washer and nut.

ESKOM COPYRIGHT PROTECTED

When downloaded from the WEB, this document is uncontrolled and the responsibility rests with the user to ensure it is in line with the authorized version on the WEB.

c) The position of the two conductor terminals shall be permanently fixed. The terminals shall therefore not move during open, latch and close operations.

3.4.10 Mounting

a) SPDs shall be suitable for a vertical single point mount arrangement.

b) SPD bases shall have an insulator-fixing stem with a 14 mm diameter fixing hole, in accordance with Figure A.4.

c) The fixing stem shall allow for attachment onto L-brackets, in accordance with Figure A.5 and Figure A.6.

d) An anti-swivel bar shall be provided on the insulator-fixing stem, in accordance with Figure A.4.

3.4.11 Earthing pin

a) Provision for the earthing pins attachment is not required on SPDs with removable switch-blades, provided that the bottom hinge can accommodate a cut-out earthing clamp that complies with [7] DDT-3235.

b) Application and removal of portable earths shall not affect the operation of the SPD.

3.4.12 Drawings

The following drawings shall be submitted for approval:

a) Outline and general arrangement drawings, showing full details of mounting dimensions and main terminals.

b) Details of insulators, contacts, terminals, operating mechanisms, bearings, current transfer arrangements and general construction.

4. Marking and packaging

4.1 Marking

SPDs shall be indelibly marked with at least the following information:

a) Name of the manufacturer

b) Product code

c) Date of manufacture

d) Rated voltage

e) Rated lightning impulse withstand voltage

f) Rated normal current

g) Rated short-time withstand current

h) Rated duration of short-circuit

i) SAP number

4.2 Packaging

The packing shall be such as to protect the components against corrosion and damage during normal handling, transportation and storage.

Packing shall be such as to permit easy identification of the components without their removal from the packing.

ESKOM COPYRIGHT PROTECTED

When downloaded from the WEB, this document is uncontrolled and the responsibility rests with the user to ensure it is in line with the authorized version on the WEB.

Each container, box or crate supplying the SPD/s shall bear the following information on the outside of the container:

a) Product description

b) Product code or part number

c) Name of manufacturer and contact details

d) Number of components of each type in the container

e) Address of the destination

f) Eskom's purchase order number

g) Eskom's material SAP number(s)

If the product is supplied by a third-party supplier (importers, agents, etc.) the container shall also bear the following information on the outside of the container:

a) Name of the supplier

b) Contact details of the supplier

5. Tests

5.1 Type tests

The type tests listed here shall be conducted by a certified, independent test authority on the complete SPDs offered and the test reports shall be submitted for approval.

The following tests shall be conducted in accordance with [3] IEC/SANS 62271-1:

a) Power frequency voltage wet withstand test

b) Lightning impulse test

c) Measurement of the resistance of the main circuit

d) Temperature rise test

e) Short-time current withstand test of 12.5 kA for 3 s.

f) The **mechanical endurance** test shall be conducted in accordance with [2] IEC/SANS 62271-102 for disconnector class M0 (i.e. 1 000 operating cycles). The test object shall be mounted on an L-bracket (refer to Figure A.5 and Figure A.6. In addition to the pass/fail criteria of [2] IEC/SANS 62271-102, bending of the L-bracket will also be considered as a fail.

g) In the **Koeberg Insulator Performance Testing Station** (KIPTS) natural ageing and pollution performance test, the SPD shall have been type tested in accordance with [2] IEC/SANS 62271-102 240-75661213, Section 4 – Particular requirements for switch disconnectors.

5.2 Routine tests

The following routine tests shall be conducted in accordance with [2] IEC/SANS 62271-102:

a) Measurement of the resistance of the main circuit.

b) Design and visual checks.

c) Mechanical operating test.

ESKOM COPYRIGHT PROTECTED

When downloaded from the WEB, this document is uncontrolled and the responsibility rests with the user to ensure it is in line with the authorized version on the WEB.

6. Authorization

This document has been seen and accepted by:

Name and surname	Designation
Bheki Ntshangase	Senior Manager HV Plant
Riaz Asmal	MV/LV SC Chairperson
Sakkie van Aarde	MV CG Chairman

7. Revisions

Date	Rev	Compiler	Remarks
Sept 2019	3	S van Aarde	Correct reference on page 25, 26 and 27 column two.
Feb 2018	2	S van Aarde	DSP 34-349 has been re-number and change from a disconnector for MV line applications to an OUTDOOR, POLE-MOUNTED, DISTRIBUTION SINGLE-PHASE, OFF-LOAD DISCONNECTORS FOR MV LINE APPLICATION WITH REMOVABLE LINK FOR NOMINAL A.C. VOLTAGES OF 22 KV.

ESKOM COPYRIGHT PROTECTED

When downloaded from the WEB, this document is uncontrolled and the responsibility rests with the user to ensure it is in line with the authorized version on the WEB.

Date	Rev	Compiler	Remarks
Feb 2014	1	S Goonoa	Document number changed from 34-349 to 240-68973356 Document reformatted into latest template. Replaced 'reticulation' with 'MV' in title, foreword and scope. Included 600 A option in foreword. Added D-DT-3087 in normative references. Added DSP 34-352 in Eskom divisional references. Updated development team 4.2.1 Included 600 A options in Table 1 Table 2: Lightning impulse withstand value across isolating distance revised for 22 kV 4.3 Renumbered 4.3.3 and 4.3.4; removed 4.3.5 4.3.2 Reworded and revised Table 3. Table 3: 'Porcelain' was replaced with 'polymer'' 4.5 Operation requirements revised for fixed and removable switchblade.4.6 4.6 Indication of position revised for fixed and removable switchblade 4.7 Securing of position revised for fixed option. 4.10 Conductor terminal requirements revised; latch operation provided. 4.12 Provision for earthing pin revised. 4.14.2 Packaging requirements revised. Annex A: Impact assessment revised. Annex B & C: Technical schedules revised. Annex D: Deviation schedule revised. Annex E: Test report summary sheet revised. Annex F: Figures revised.

ESKOM COPYRIGHT PROTECTED

When downloaded from the WEB, this document is uncontrolled and the responsibility rests with the user to ensure it is in line with the authorized version on the WEB.

Date	Rev	Compiler	Remarks
Sept 2011	0.1	R Theron	Added bibliography. 2 Updated normative references. Table 2: Removed the material specific requirements 4.2.2.1 Reworded. 4.3.2 Corrected in accordance with latest version of SANS 60815. 4.4.1.4 Changed reference from SANS 60265-1 to SANS 60694. 4.10 Requirement for conductor clamps (PG type) removed 4.10.3 New requirement 4.12 Revised earthing pin requirements 4.5.1.1 Reworded. 4.7 Reworded. 4.13 The rating plate requirements were moved to clause 6.1. 5 Revised test requirements. 6.2 New requirement Annex B: Completed impact assessment Annex C: Added type test summary sheet
Feb 2007	0	S Moloko	Document approved as DSP 34-349. Changed document template. New reference number issued, changed from DISSCABL5 to 34-349. Added Foreword. Added 4.1.1 & 4.1.2. Installation & system condition.
Sep 2005	1	S Moloko	Document approved as DISSCABL5. Changed: SABS IEC 60265-1 to SANS 60265-1 Changed: SABS IEC 61109 to SANS 61109 Changed: SABS IEC 60129: 1996 to SANS 62271-102 Changed: SABS ISO 1461 to SANS 121 Changed: SABS 1700 to SANS 17004.3 Increased the margin of the isolating distance to 320 -10%. The technical schedules were also changed. 4.7 Added a note on the KIPTS test for costal application of Cyclo, EPDM and ESP insulators.
Sep 2003	0	S Moloko	Document approved as DISSCABL5.

8. Development team

The following people were involved in the development of this document:

- Osie Oosthuizen
- Jason Blaauw
- Shalen Goonoa

ESKOM COPYRIGHT PROTECTED

When downloaded from the WEB, this document is uncontrolled and the responsibility rests with the user to ensure it is in line with the authorized version on the WEB.

- Frikkie Van Niekerk
- Isaac Sibeko

9. Acknowledgements

Not applicable.

ESKOM COPYRIGHT PROTECTED

When downloaded from the WEB, this document is uncontrolled and the responsibility rests with the user to ensure it is in line with the authorized version on the WEB.

Annex A – Double blade 630 amp link.

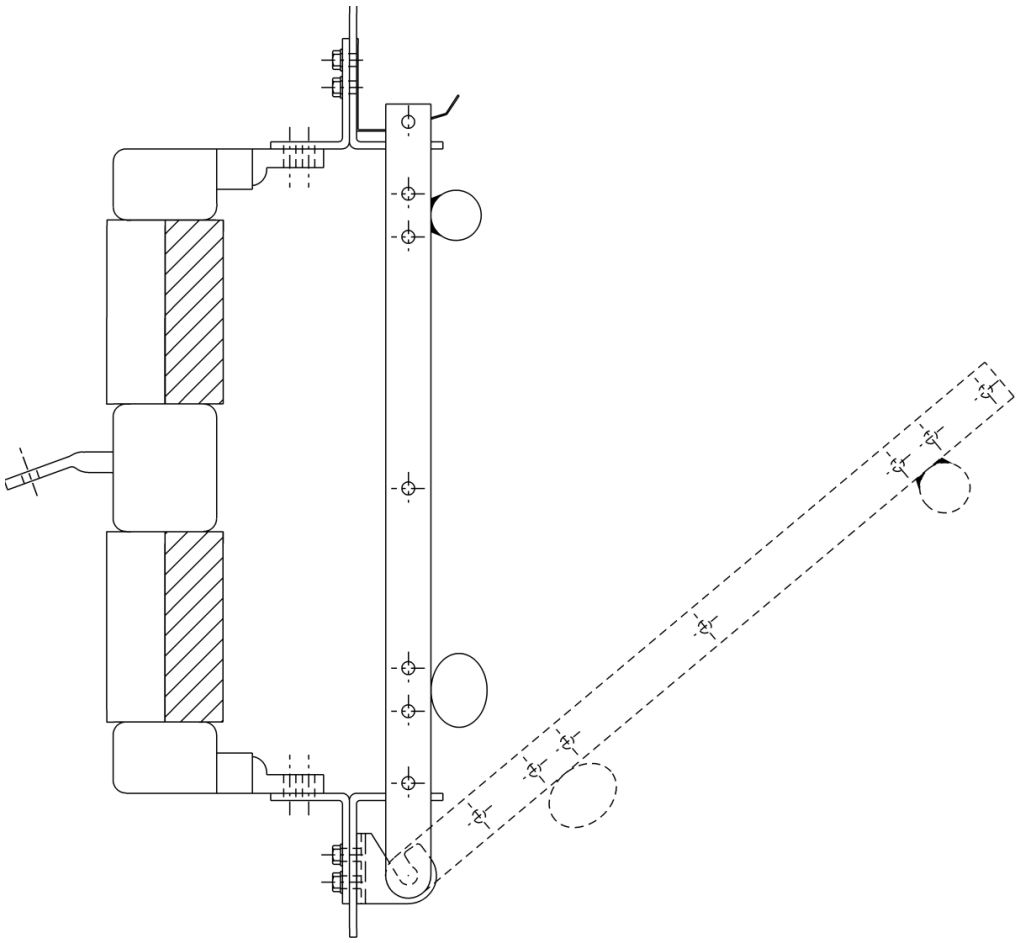

Figure A.1: Removable double blade 630 amp link assembly with fixing stem at 20° (±0.2mm)

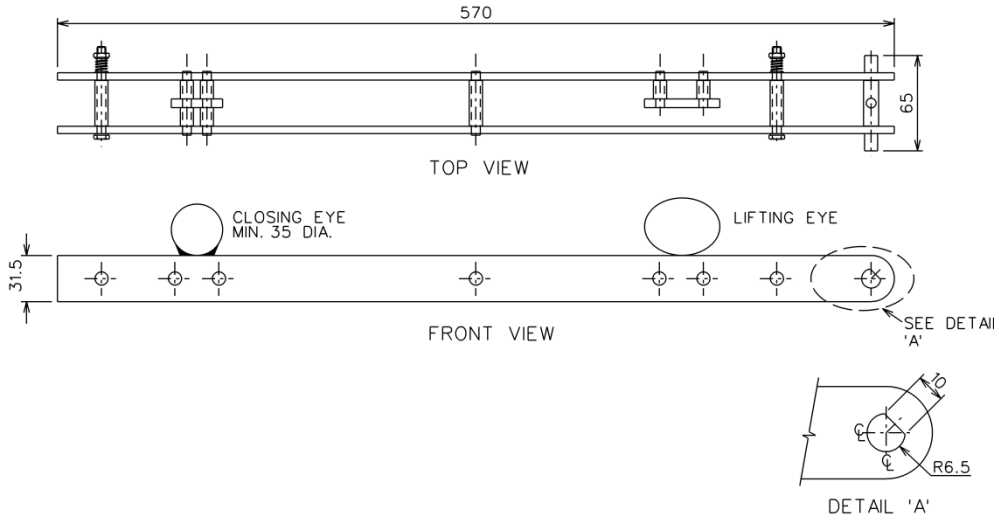

Figure A.2: Removable double blade 630 amp link and lower hinge details (±0.2mm)

ESKOM COPYRIGHT PROTECTED

When downloaded from the WEB, this document is uncontrolled and the responsibility rests with the user to ensure it is in line with the authorized version on the WEB.

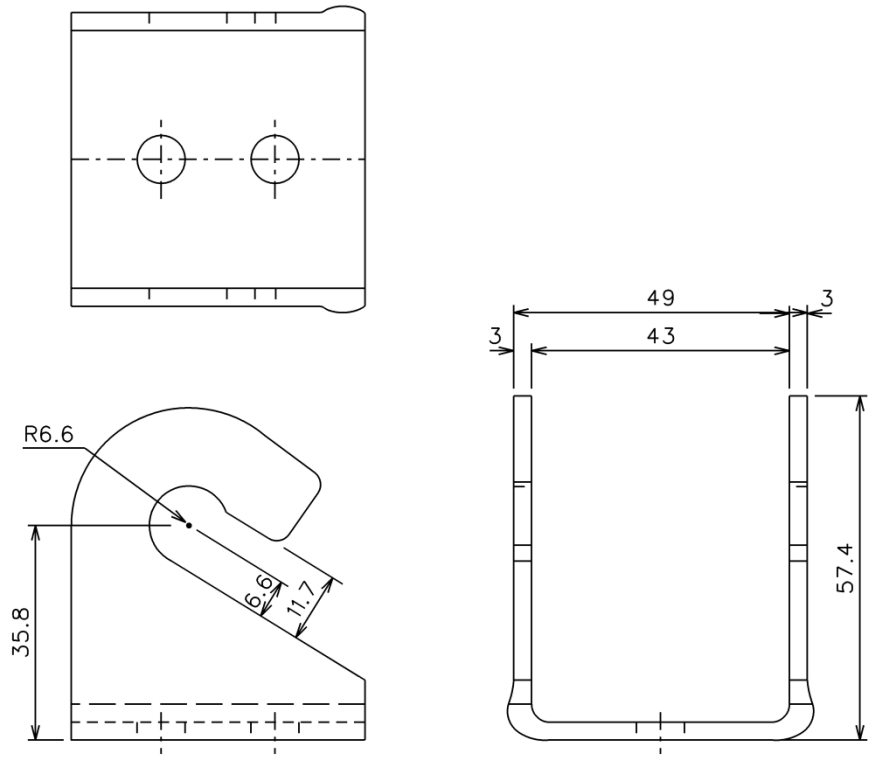

Figure A.3: Double blade 630 amp link base lower hinge details (±0.2mm)

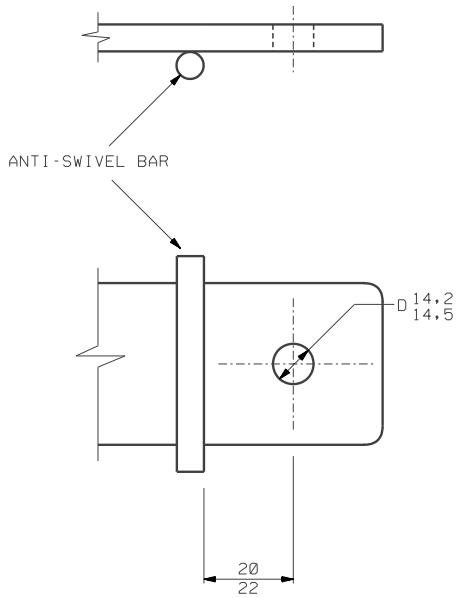

NOTE - INSULATOR-FIXING STEM GALVANIZED IN ACCORDANCE WITH SABS ISO 1461

Figure A.4: Insulator fixing stem

ESKOM COPYRIGHT PROTECTED

When downloaded from the WEB, this document is uncontrolled and the responsibility rests with the user to ensure it is in line with the authorized version on the WEB.

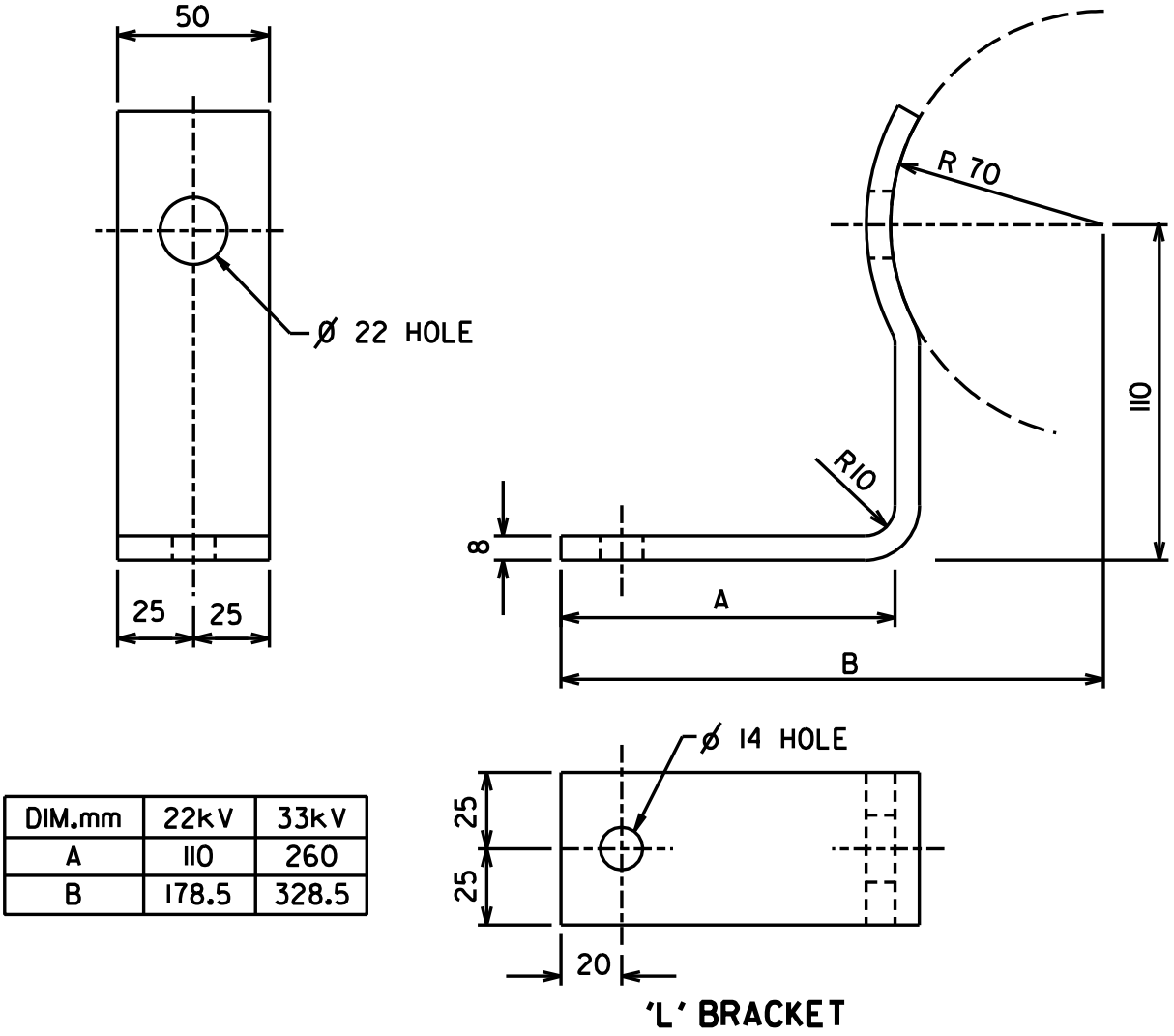

DIM.mm	22kV	33kV
A	110	260
B	178.5	328.5

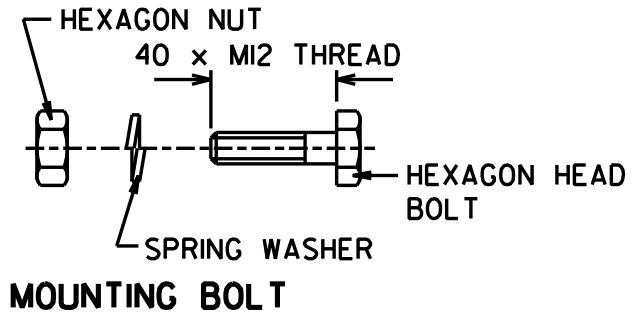

Figure A.5: Typical L-bracket for wooden cross-arm

ESKOM COPYRIGHT PROTECTED

When downloaded from the WEB, this document is uncontrolled and the responsibility rests with the user to ensure it is in line with the authorized version on the WEB.

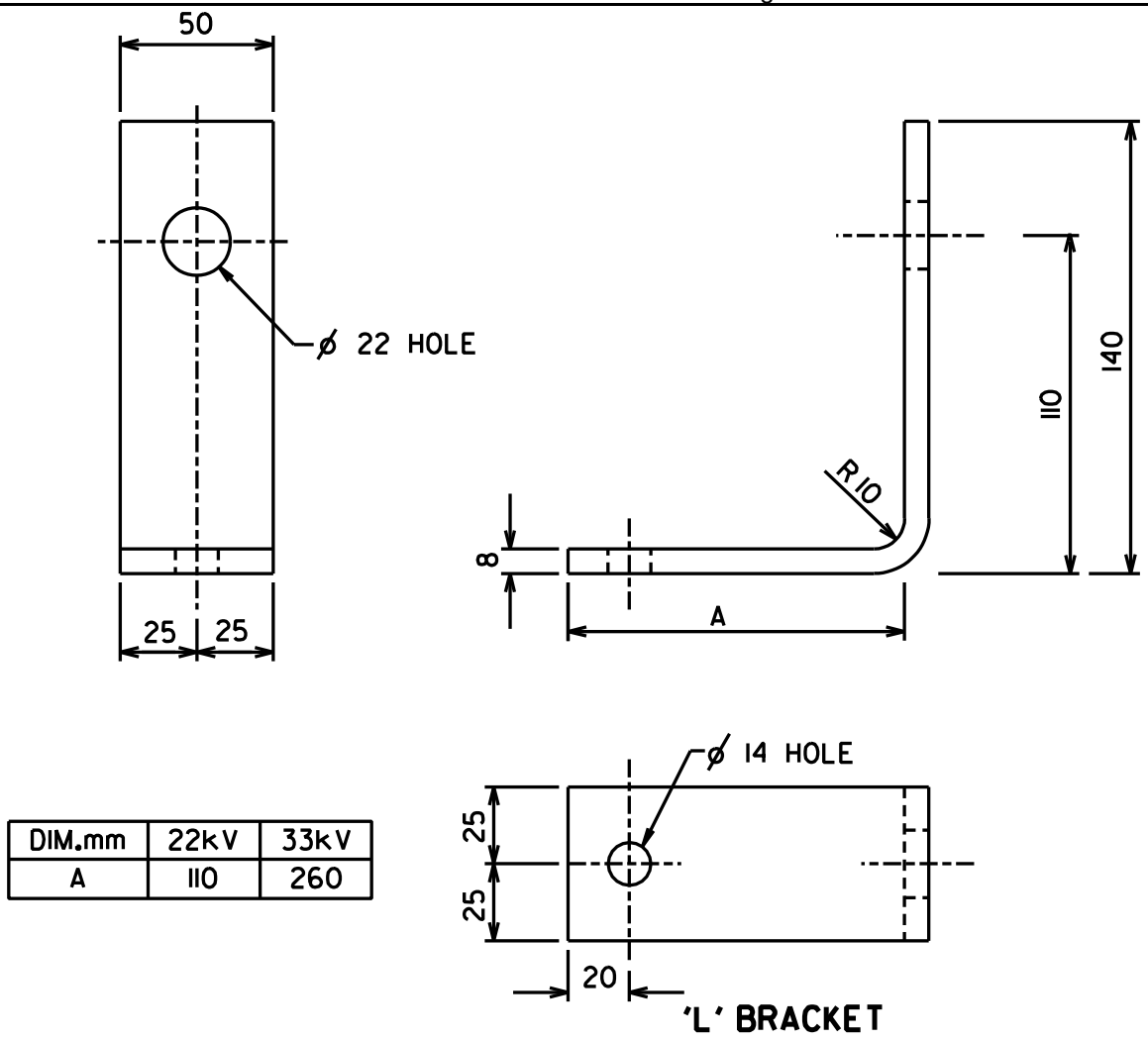

DIM.mm	22kV	33kV
A	110	260

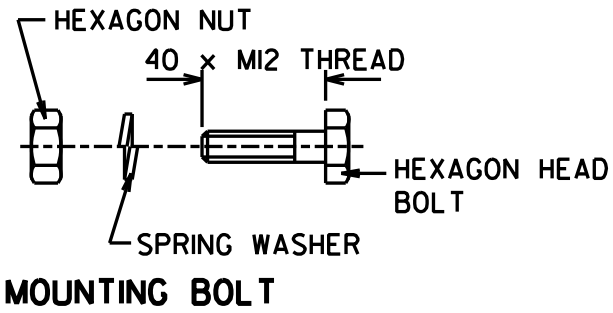

Figure A.6: Typical L-bracket for steel cross-arm

ESKOM COPYRIGHT PROTECTED

When downloaded from the WEB, this document is uncontrolled and the responsibility rests with the user to ensure it is in line with the authorized version on the WEB.

Annex B – Impact assessment

(Normative)

Impact assessment form to be completed for all documents.

1) Guidelines

- All comments must be completed.
- Motivate why items are N/A (not applicable)
- Indicate actions to be taken, persons or organisations responsible for actions and deadline for action.
- Change control committees to discuss the impact assessment, and if necessary give feedback to the compiler of any omissions or errors.

2) Critical points

2.1 Importance of this document. E.g. is implementation required due to safety deficiencies, statutory requirements, technology changes, document revisions, improved service quality, improved service performance, and optimised costs.

Comment: Document revision and improved service performance.

2.2 If the document to be released impacts on statutory or legal compliance - this need to be very clearly stated and so highlighted.

Comment: No impact.

2.3 Impact on stock holding and depletion of existing stock prior to switch over.

Comment: No impact.

2.4 When will new stock be available?

Comment: From the start of the next enquiry for double blade 630 amp links.

2.5 Has the interchangeability of the product or item been verified - i.e. when it fails is a straight swop possible with a competitor's product?

Comment: It will be verified with the first evaluation.

2.6 Identify and provide details of other critical (items required for the successful implementation of this document) points to be considered in the implementation of this document.

Comment: None.

2.7 Provide details of any comments made by the Regions regarding the implementation of this document.

Comment:

3) Implementation timeframe

3.1 Time period for implementation of requirements.

Comment: Not applicable.

3.2 Deadline for changeover to new item and personnel to be informed of DX wide change-over.

Comment: Not applicable.

ESKOM COPYRIGHT PROTECTED

When downloaded from the WEB, this document is uncontrolled and the responsibility rests with the user to ensure it is in line with the authorized version on the WEB.

4) Buyers Guide and Power Office

4.1 Does the Buyers Guide or Buyers List need updating?

Comment: Yes.

4.2 What Buyer's Guides or items have been created?

Comment: None.

4.3 List all assembly drawing changes that have been revised in conjunction with this document.

Comment: None.

4.4 If the implementation of this document requires assessment by CAP, provide details under 5

4.5 Which Power Office packages have been created, modified or removed?

Comment: None.

5) CAP / LAP Pre-Qualification Process related impacts

5.1 Is an ad-hoc re-evaluation of all currently accepted suppliers required as a result of implementation of this document?

Comment: No..

5.2 If NO, provide motivation for issuing this specification before Acceptance Cycle Expiry date.

Comment: No suppliers have been evaluated to supplied this product.

5.3 Are ALL suppliers (currently accepted per LAP), aware of the nature of changes contained in this document?

Comment: The draft document will also be forwarded to the manufacturers for their comments.

5.4 Is implementation of the provisions of this document required during the current supplier qualification period?

Comment: No.

5.5 If Yes to 5.4, what date has been set for all currently accepted suppliers to comply fully?

Comment: N/A

5.6 If Yes to 5.4, have all currently accepted suppliers been sent a prior formal notification informing them of Eskom's expectations, including the implementation date deadline?

Comment: N/A

5.7 Can the changes made, potentially impact upon the purchase price of the material/equipment?

Comment: Possibly a slight impact.

5.8 Material group(s) affected by specification: (Refer to Pre-Qualification invitation schedule for list of material groups)

Comment: Distribution 630 amp double blade links

6) Training or communication

6.1 Is training required?

Comment: No

ESKOM COPYRIGHT PROTECTED

When downloaded from the WEB, this document is uncontrolled and the responsibility rests with the user to ensure it is in line with the authorized version on the WEB.

6.2 State the level of training required to implement this document. (E.g. awareness training, practical / on job, module, etc.)

Comment: N/A

6.3 State designations of personnel that will require training.

Comment: N/A

6.4 Is the training material available? Identify person responsible for the development of training material.

Comment: N/A

6.5 If applicable, provide details of training that will take place. (E.G. sponsor, costs, trainer, schedule of training, course material availability, training in erection / use of new equipment, maintenance training, etc).

Comment: N/A

6.6 Was Technical Training Section consulted w.r.t module development process?

Comment: N/A

6.7 State communications channels to be used to inform target audience.

Comment: N/A

7) Special tools, equipment, software

7.1 What special tools, equipment, software, etc will need to be purchased by the Region to effectively implement?

Comment: None

7.2 Are there stock numbers available for the new equipment?

Comment: Yes

7.3 What will be the costs of these special tools, equipment, software?

Comments: n/a

8) Finances

8.1 What total costs would the Regions be required to incur in implementing this document? Identify all cost activities associated with implementation, e.g. labour, training, tooling, stock, obsolescence

Comment:

……

……

……

Impact assessment completed by:

Name: Sakkie van Aarde_____

Designation: Senior Advisor_____

ESKOM COPYRIGHT PROTECTED

When downloaded from the WEB, this document is uncontrolled and the responsibility rests with the user to ensure it is in line with the authorized version on the WEB.

Annex C – : - Test report summary sheet

Item description: ……

Test		Report no.	Test facility	Comments	Report submitted (Y/N)
5.1.a)	Power frequency voltage wet withstand				
5.1.b)	Lightning impulse				
5.1.c)	Resistance Measurement				
5.1.d)	Temperature-rise				
5.1.e)	Short-time current withstand				
5.1.f)	Mechanical endurance				
5.1.g)	KIPTS natural ageing and pollution performance				

ESKOM COPYRIGHT PROTECTED

When downloaded from the WEB, this document is uncontrolled and the responsibility rests with the user to ensure it is in line with the authorized version on the WEB.

Annex D – Technical schedules A and B

The following two sets of technical schedules are provided:

22 kV, removable double blade 630 amp link base, coastal application, off-load.

22 kV, removable double blade 630 amp link.

Separate schedules should be submitted for off-load and load-break products and the relevant tick box at the top of each page should be ticked.

ESKOM COPYRIGHT PROTECTED

When downloaded from the WEB, this document is uncontrolled and the responsibility rests with the user to ensure it is in line with the authorized version on the WEB.

Schedule A: Purchaser's specific requirements

Schedule B: Guarantees and technical particulars of equipment offered

Item	Sub-clause of 240-68973356	Description		Schedule A	Schedule B
1		**Identification**			
		a) Name of manufacturer		xxxxxxxxxxx	_____
		b) Name of supplier		xxxxxxxxxxx	_____
		c) Product code of solid link		xxxxxxxxxxx	_____
2		**System conditions of service**			
		a) nominal voltage (U_n) r.m.s.	kV	22	xxxxxxxxxxx
		b) maximum voltage (U_m) r.m.s.	kV	24	xxxxxxxxxxx
		c) earthing		effective and non-effective	xxxxxxxxxxx
		d) frequency	Hz	50	xxxxxxxxxxx
3		**Site conditions of service**			
		a) altitude	m	up to 1 800	xxxxxxxxxxx
		b) ambient temperature			
		a. minimum to maximum	ºC	–15 to 50	xxxxxxxxxxx
		b. maximum daily variation	ºC	35	xxxxxxxxxxx
		c) relative humidity	%	up to 100	xxxxxxxxxxx
4	**3.2**	**Rated requirements**			
		a) Nominal voltage	kV	22	xxxxxxxxxxx
		b) Load current	A	630	_____
		c) Short time withstand current			
		a. 3 s	kA	xxxxxxxxxxx	_____
5	**Annex B**	**Interfacing dimensions (± 0.2mm)**			
		a) Figure 1	mm	570	_____
		b) Figure 3	mm	43	_____
		c) Distance between blades	mm	30	_____

ESKOM COPYRIGHT PROTECTED

When downloaded from the WEB, this document is uncontrolled and the responsibility rests with the user to ensure it is in line with the authorized version on the WEB.

Schedule A: Purchaser's specific requirements

Schedule B: Guarantees and technical particulars of equipment offered

Schedule B: Guarantees and technical particulars of equipment offered

Item	Sub-clause of 240-68973356	Description		Schedule A	Schedule B
		d) Figure 2 closing eye	mm	≥ 35	_____
		e) Figure 2 lifting eye	mm	≥ 35	_____
		f) Figure 2 detail A	mm	10	_____
		g) Figure 2 detail A	mm	R6.5	_____
		Lower Hinge			
		a) Figure 3	mm	49	_____
		b) Figure 3	mm	43	_____
		c) Figure 3	mm	57.4	_____
		d) Figure 3	mm	6.6	_____
		e) Figure 3	mm	R6.6	_____
		f) Figure 3	mm	11.7	_____
		g) Figure 3	mm	35.8	_____
		Materials			
		a) Solid link		xxxxxxxxxx	_____
6		**General information**			
		a) Drawing		Drawing no.	_____
		b) Sample required		Yes	_____
7	**5.1**	**Type Tests**			
		Provide report number for type test reports submitted with tender documentation			
		a) Power frequency voltage wet withstand test		xxxxxxxxxx	_____
		b) Lightning impulse test		xxxxxxxxxx	_____
		c) Measurement of the resistance of the main circuit		xxxxxxxxxx	_____
		d) Temperature rise			

ESKOM COPYRIGHT PROTECTED

When downloaded from the WEB, this document is uncontrolled and the responsibility rests with the user to ensure it is in line with the authorized version on the WEB.

Schedule A: Purchaser's specific requirements
Schedule B: Guarantees and technical particulars of equipment offered

Item	Sub-clause of 240-68973356	Description	Schedule A	Schedule B
		e) Short-time current withstand test	xxxxxxxxxxx	_____
		f) Mechanical endurance test	xxxxxxxxxxx	_____
		g) KIPTS natural ageing and pollution performance test	xxxxxxxxxxx	_____

ESKOM COPYRIGHT PROTECTED

When downloaded from the WEB, this document is uncontrolled and the responsibility rests with the user to ensure it is in line with the authorized version on the WEB.

Deviation schedule

Any deviations from this specification shall be listed below with reasons for deviation. In addition, evidence shall be provided that the proposed deviation will at least be more cost-effective than that specified by Eskom.

Item	Clause	Proposed deviation

ESKOM COPYRIGHT PROTECTED

When downloaded from the WEB, this document is uncontrolled and the responsibility rests with the user to ensure it is in line with the authorized version on the WEB.